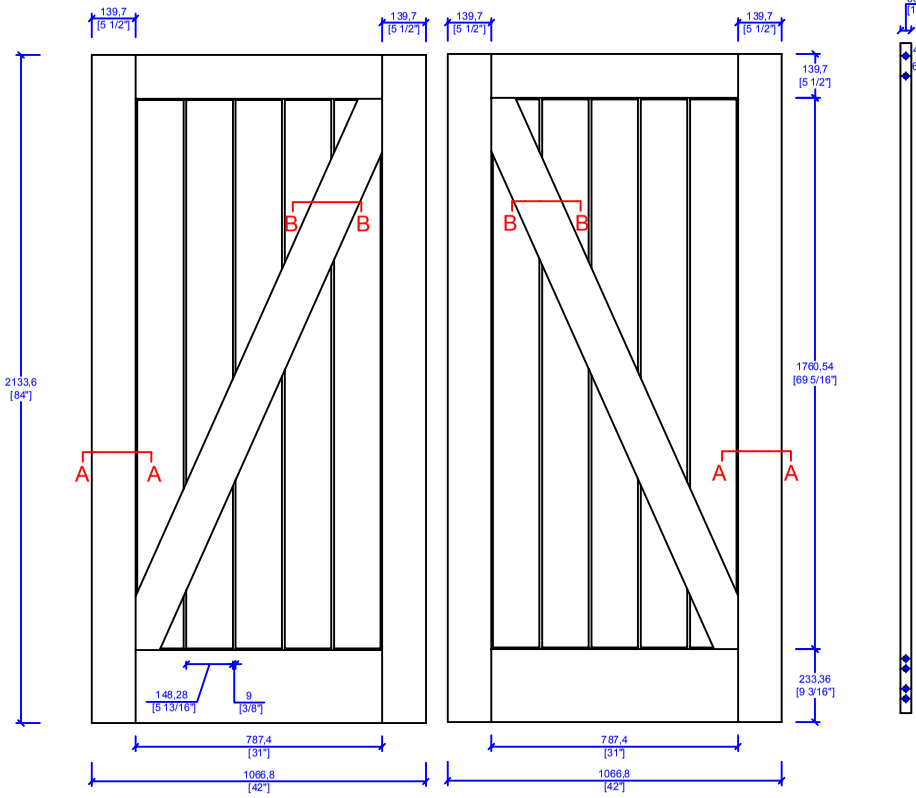

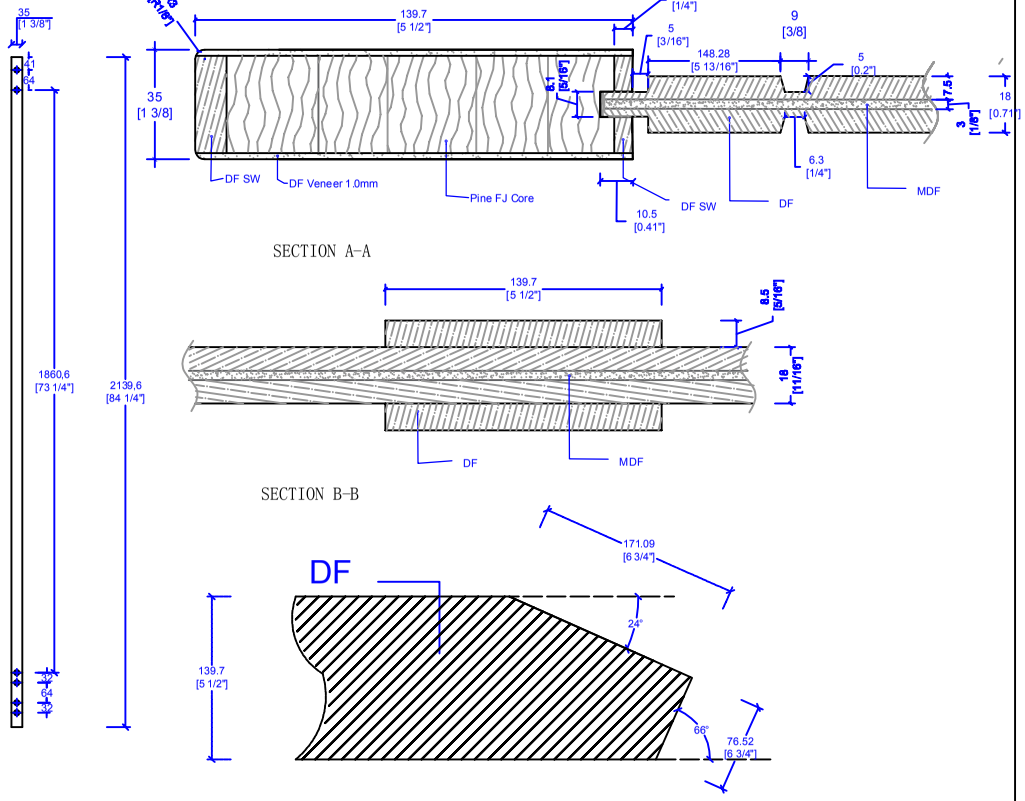

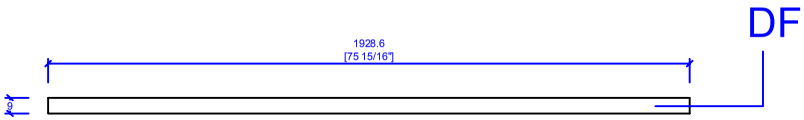

SECTION B–B

REV.	DESCRIPTION	DATE	BY
A		2016. 11. 12	

UNLESS OTHERWISE SPECIFIED:
DIMENSIONS ARE IN mm[INCHES]
TOLERANCES:
ANGULAR: ±1°
PROFILE: ±
FABRICATION: ±

DO NOT SCALE DRAWING

PROPRIETARY AND CONFIDENTIAL

THE INFORMATION CONTAINED IN THIS DRAWING IS THE SOLE PROPERTY OF TRIMLITE COMPANY. ANY REPRODUCTION IN PART OR AS A WHOLE WITHOUT THE WRITTEN PERMISSION OF TRIMLITE COMPANY IS PROHIBITED

TRIMLITE

TITLE:
8401BZ
1-3/8"x7-0"DF

DWG. NO.

REV. A

DRAWN:

SCALE:

SHEET: 1OF1